# 150W Single Output Switching Power Supply LRS-150 Series



Size：159*97*30mm

## Features:

- Universal AC input/Full range
- Built-in EMI filter, tiny ripple
- Protections:short circuit/overload/over voltage
- Cooling by free air convection
- 43,000 hours of continuous operation at 25℃
- 100% full load burn-in test
- LED indicator for power on
- Compliance to IEC/EN60335-1 (PD3) and IEC/EN61558-1,2-16 suitable for home appliance
- 3 years warranty
- FR-4 Double-Sided Board Design

ISO9001:4008

## SPECIFICATION

| Model | | LRS-150-12 | LRS-150-15 | LRS-150-24 | LRS-150-36 | LRS-150-48 |
|---|---|---|---|---|---|---|
| OUTPUT | DC VOLTAGE | 12V | 15V | 24V | 36V | 48V |
| | RATED CURRENT | 12.5A | 10A | 6.3A | 4.2A | 3.2A |
| | CURRENT RANGE | 0 ~ 12.5A | 0~10A | 0 ~ 6.3A | 0 ~ 4.2A | 0 ~ 3.2A |
| | RATED POWER | 150W | 150W | 151.2W | 151.2W | 153.6W |
| | RIPPLE&NOISE(Max) | 150mVp-p | 150mVp-p | 200mVp-p | 200mVp-p | 200mVp-p |
| | VOLTAGE ADJ.RANGE | 10.5 ~ 13.8V | 13.5~18V | 21.6 ~ 28.8V | 32.4 ~ 39.6V | 43.2 ~ 52.8V |
| | VOLTAGE TOLERANCE | ±1.0% | ±1.0% | ±1.0% | ±1.0% | ±1.0% |
| | LINE REGULATION | ±0.5% | ±0.5% | ±0.5% | ±0.5% | ±0.5% |
| | LOAD REGULATION | ±0.5% | ±0.5% | ±0.5% | ±0.5% | ±0.5% |
| | SETUP,RISE TIME | 500ms, 30ms/230VAC 500ms, 30ms/115VAC(full load) | | | | |
| | HOLD UP TIME (Typ.) | 40ms/230VAC 35ms/115VAC (full load ) | | | | |
| INPUT | VOLTAGE RANGE | 85 ~ 264VAC 240~370VDC | | | | |
| | FREQUENCY RANGE | 47 ~ 63Hz | | | | |
| | EFFICIENCY(Typ.) | 86% | 87% | 88% | 88% | 89% |
| | AC CURRENT(Typ.) | 3A/115VAC 1.7A/230VAC | | | | |
| | INRUSH CURRENT(Typ.) | COLD START 60/230VAC | | | | |
| | LEAKAGE CURRENT | <0.75mA / 240VAC | | | | |
| PROTECTION | OVERLOAD | 110~ 140% rated output power | | | | |
| | | Protection type:Hiccup mode,recovers automatically after fault condition is removed | | | | |
| | OVER VOLTAGE | 13.8~16.2V | 18.75~21.75V | 28.8~33.6V | 41.4~48.6V | 55.2~64.8V |
| | | Protection type:Shut down o/p voltage, re-power on to recover | | | | |
| ENVIRONMENT | WORKING TEMP. | -20 ~ +70℃ (Refer to "derating curve" ) | | | | |
| | WORKING HUMIDITY | 20 ~ 90% RH non-condensing | | | | |
| | STORAGE TEMP.,HUMIDITY | -45 ~ +85℃, 20% ~ 95% RH non-condensing | | | | |
| | TEMP.COEFFICIENT | ±0.03%/℃ (0 ~ 50℃) | | | | |
| | VIBRATION | 10 ~ 500Hz, 2G 10 min/1cycle,60min.each X、Y、Z axes | | | | |
| SAFETY | SAFETY STANDARDS | GB4943.1, EN 662368-1 and EN 60335-1 APPROVED | | | | |
| | WITHSTAND VOLTAGE | I/P-O/P:2KVAC I/P-FG:2VAC O/P-FG:0.5KVAC | | | | |
| | ISOLATION RESISTANCE | I/P-O/P, I/P-FG, O/P-FG:100M Ohms / 500VDC / 25 ℃/ 70% RH | | | | |
| | EMC EMISSION | Compliance to EN61000-3-2:2014/EN61000-3-3:2013 | | | | |
| | EMC IMMUNITY | Compliance to EN 55032:2015/EN55035:2017/60950-1 | | | | |
| OTHERS | MTBF | ≥601K hrs MIL-HDBK-217F( 25 ℃) | | | | |
| | DIMENSION | 159*97*30mm (L*W*H) | | | | |
| | PACKING | 0.48Kg/PCS,30PCS/15.4KG/0.75CUFT | | | | |

**NOTE**

1. All parameters NOT specially mentioned are measured at 230VAC input,rated load and 25℃ of ambient temperature.
2. Ripple&noise are measured at 20MHz of bandwidth by using a 12 "twisted pair -wire terminated with a 0.1uf and 47uf parallel capacitors.
3. Tolerance:includes set up tolerance,line regulation and load regulation.
4. Derating output is required under low input voltage. Please refer to the derating curve for details.
5. The power supply should be considered as a part of the components in the system. All EMC tests will test the test samples on a metal iron plate with a thickness of 1mm, a length of 360mm * width of 360mm.


Http://www.smun.com TEL:0577- 62657774

# 150W Single Output Switching Power Supply LRS-150 Series

## Mechanical Specification

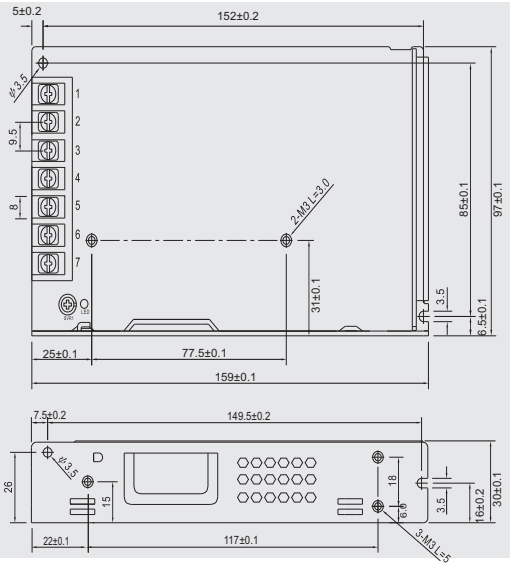


Terminal Pin No.Assignment:

| Pin No. | Assigment | Pin No. | Assigment |
|---|---|---|---|
| 1 | AC/L | 4-5 | DC OUTPUT -V |
| 2 | AC/N | 6-7 | DC OUTPUT +V |
| 3 | FG ⏚ | | |

## Block Diagram

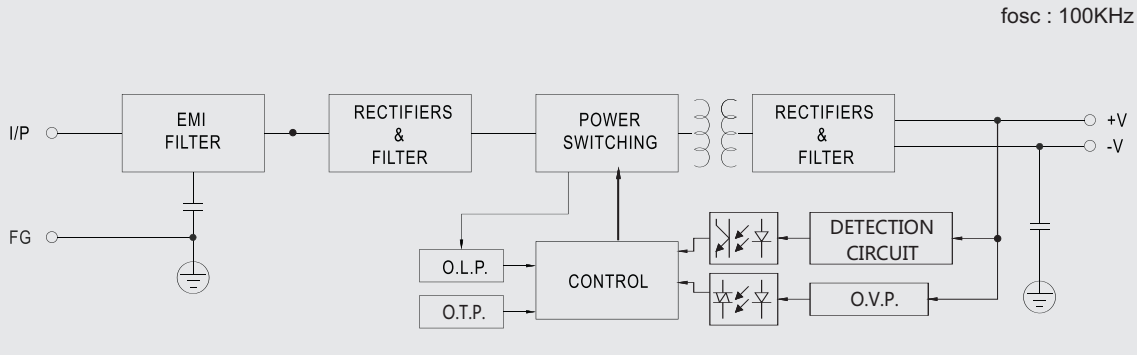


## Derating Curve

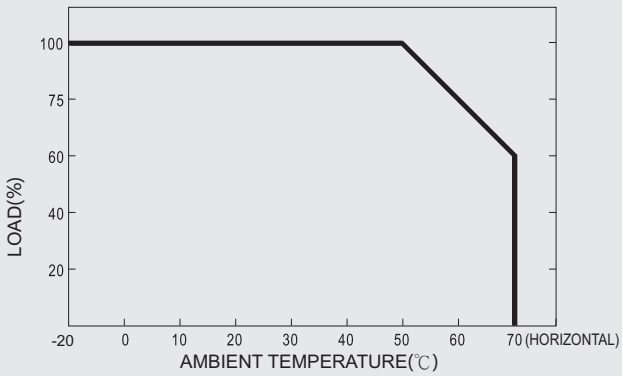


## Static Characteristic

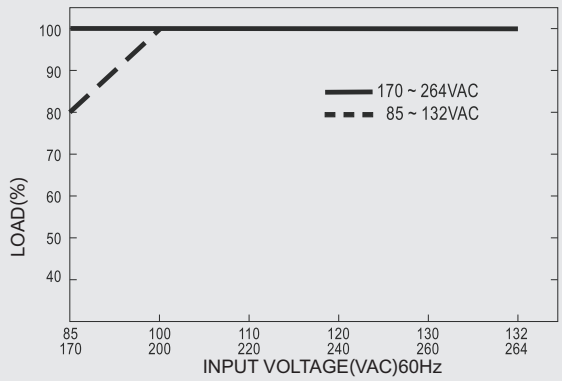



Http://www.smun.com TEL:0577- 62657774